VORTICE

RESIDENTIAL VENTILATION

VORT HRW 20 MONO RANGE

Decentralized heat recovery units

NEW

INDEX

RESIDENTIAL VENTILATION

archiproducts DESIGN AWARDS — BEST of CATEGORY 2016

VORT HRW 20 MONO RC

Decentralized heat recovery units with separate remote control unit

Pag. 4

Code 11634

VORT HRW 20 MONO

Decentralized heat recovery units with operating controls built into the appliance

Page 4

Code 11631

Code 11631

Code 11671

VORT HRW 20 MONO HCS

Decentralized heat recovery units with operating controls built into the appliance and humidity sensor

Page 4

NEW

VORT HRW 20 MONO D

Decentralized heat recovery units with separate remote control unit and compliant to German regulation

Page 10

VORT HRW 20 MONO RANGE

Decentralized heat recovery units

Decentralized ventilation system with heat recovery, high efficiency, suitable for recessed installation (nominal hole diameters 160 mm) in outside walls of thickness between 285 mm and 700 mm. Quiet, efficient, energy saving and antiallergic (thanks to built-in filers preventing the release of pollutants and allergens into the surrounding air), easy to install and maintain, the VORT HRW 20 MONO, represents the ideal alternative to traditional dual flow centralized ventilation systems.

- 3 models: VORT HRW 20 MONO with operating controls built into the appliance and VORT HRW 20 MONO RC with separate Remote Control unit and VORT HRW 20 MONO HCS.
- Expanded polypropylene (PPE) enclosure.
- Inner panel made of V0 self-extinguishing aesthetic plastic polymer (ABS), clad with heat-insulating material.
- EC brushless motor affording high performance and extremely low power consumption; mounting bracket with ball bearings.
- Accumulator heat exchanger made of ceramic material, high efficiency.
- 5 selectable speeds.
- 3 operating modes for both versions: ventilation with heat recovery; with stale air extraction only; with fresh air supply only.
- Moulded rubber outer grille, which can be mounted externally with masonry plugs, or inserted internally through the hole prepared in the wall with no need for external scaffolding.
- Separate insect mesh, positionable in the duct together with the external grille at the moment of installation.
- Stale internal air extracted around the perimeter of the front panel.
- Outlet port of circular section, nominal diameter 160 mm.
- Washable G3 filter, easily accessible for maintenance purposes.
- Factory-prepared for wall wiring.
- Diagnostics and filter status Leds.
- HCS models are equipped with a relative humidity sensor (four threshold values: 60%, 70%, 80%, 90%, can be set at installation), which automatically start the extraction mode at max speed when indoor relative humidity exceeds the pre-set limit.
- Possibility of operation in automatic mode, enabled by installing optional temperature and relative
- Humidity sensors.
- Protection rating: IPX4.
- Insulation class: II ⧈.


VORT HRW MONO RC
(code 11635)

VORT HRW 20 MONO RANGE

Decentralized heat recovery units

KEY FEATURES

- Elegant aesthetics, perfectly fitting in the residential.
- Small indoor dimensions (240 x 224 x 95 mm version equipped with on-board commands, 240 x 224 x 64 mm version controlled through wired control box).
- Five airflows comprehended in the range between 10 m^3/h and 41 m^3/h, to allow the best compromise among performances, consumptions and noise emissions.
- Very low consumptions (≤ 2 W when running at Min speed, ≤ 5 W when at Max speed), compatible with continuous operation.
- Low noise levels (16 dB(A) at Min speed according to DIN 52210-6), compatible. with use in studies, bedrooms, living rooms, etc.
- High values of heat transfer efficiency (90% at minimum flow rate according to EN 308), to grant the comfort of users.
- Easy to install, set and use.
- No need to install systems for removal of condensate.
- Wired control box integrating the power supply (no external device needed), allowing switching on/off and selection of operating mode. Up to 4 products can be wired simultaneously to 1 controller.
- Complying with the requirements of Regulation N° 1253/2016/UE set out by the EUP/ErP Directive, effective starting from 01.01.2018.
- Operation permissible across a wide range of outdoor temperatures (-20°/ 50° C).

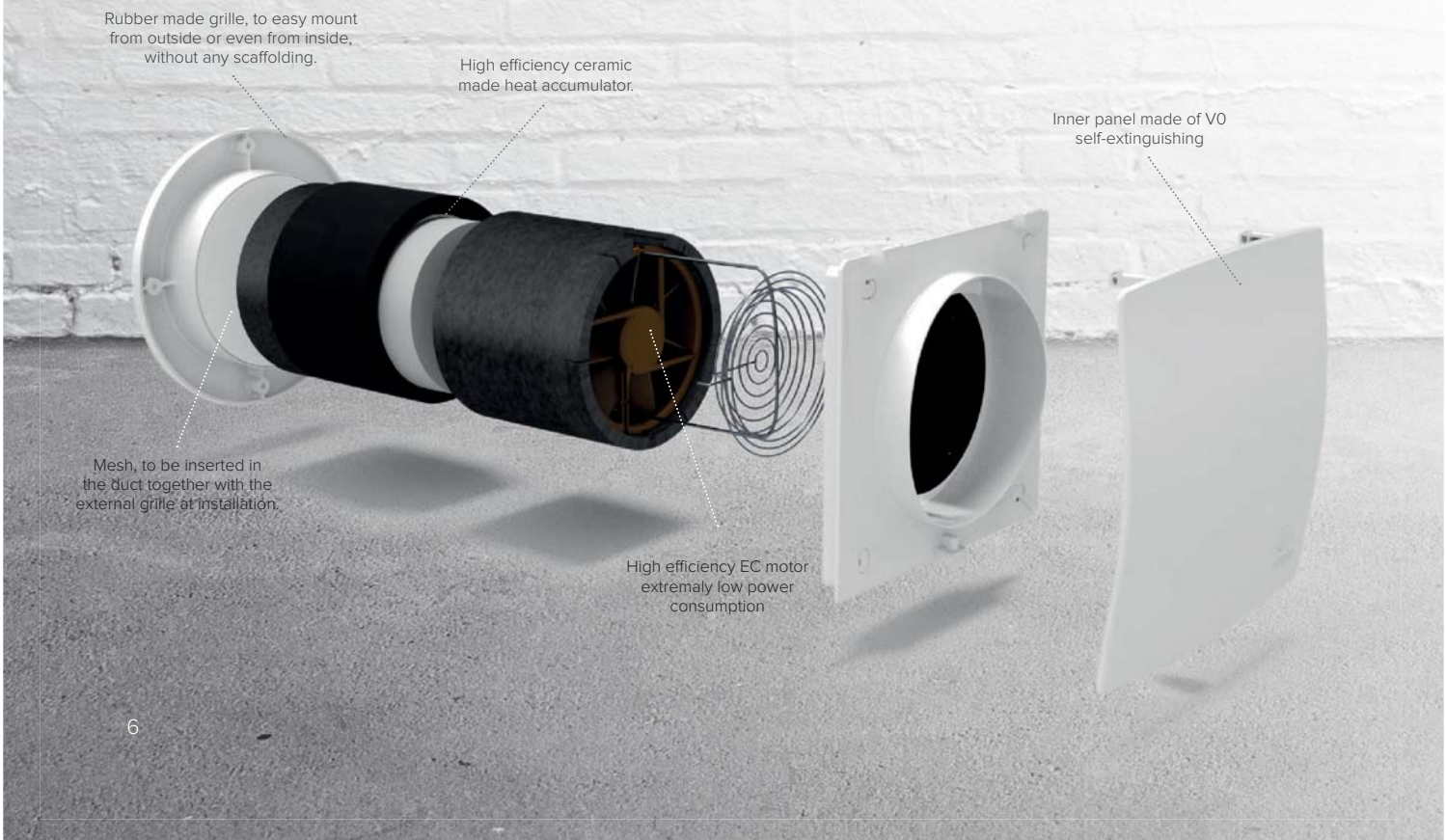

CONTROL PANEL VORT HRW 20 MONO AND VORT HRW 20 MONO HCS

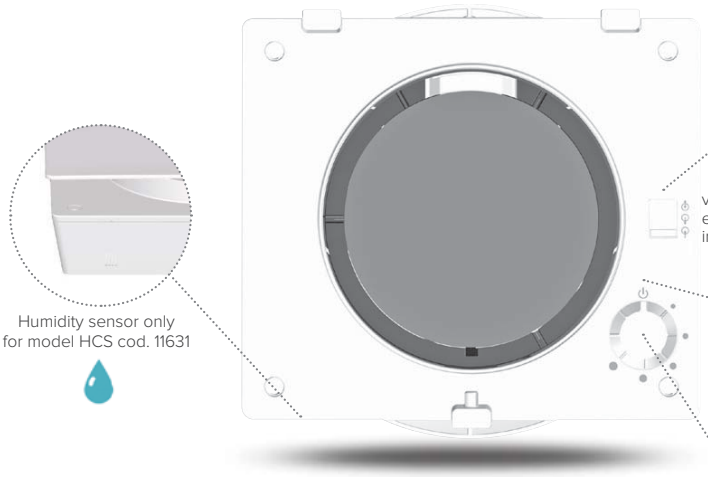

3 position operation mode selector
position 1 ➔ ventilation with heat recovery
position 2 ➔ extraction
position 3 ➔ intake

ventilation with heat recovy
extraction
intake

Filter status indicator LED
LED off ➞ filters clean
LED on ➞ filters to be cleaned or replaced

Speed Setting Knob
(0 = Off, 1-5 = Fan Speed)

REMOTE CONTROL VORT HRW 20 MONO RC

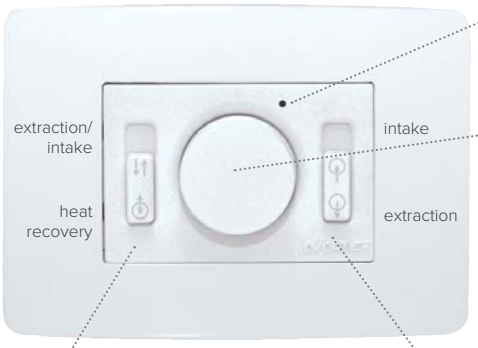

Filter status indicator LED
LED off ➔ filter clean
LED on ➔ filters to be cleaned or replaced

Speed Setting Knob
(0 = Off, 1-5 = Fan speeds)

Recessed versions, thanks to an intermediate adjustable support, can be coupled with various existing standard face plates, satisfying diverse aesthetic requirements.

2-position operation mode selector
position 1 ➔ extraction/intake
position 2 ➔ ventilation with heat recovery

2-position operation mode selector
position 1 ➔ intake
position 2 ➔ extraction.

Available optional ancillaries
- white face plate code 22462
- anthracite grey face plate code 22463

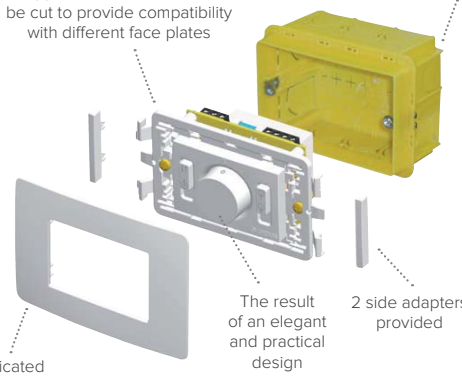

Support with 4 side teeth to be cut to provide compatibility with different face plates

Box 503 type

The result of an elegant and practical design

2 side adapters provided

Dedicated face plate

VORT HRW 20 MONO RANGE

Decentralized heat recovery units

TECHNICAL DATA

MODELS	CODE	V ~ 50 Hz	W min/max	A min/max	MAX AIRFLOW m^3/h min/max	MAX AIRFLOW l/s min/max	MAX PRESSURE mmH_2O min/max	MAX PRESSURE Pa min/max	Lp dB(A)* 3 m	°C max	Kg
VO\RT HRW 20 MONO	11634	230	1.0 5.0	0.015 0.05	10.0 41.0	2.77 11.3	0.635 4.10	6.22 40.60	<16.0 23.6	30	2.55
VORT HRW 20 MONO RC	11635										2.25
VORT HRW 20 MONO HCS	11631										2.60

SOUNDS LEVELS

Standard sound pressure difference Dn,e,w*	32 dB
Standard sound pressure difference Dn,e,w* with wind shield MWS	35 dB
Standard sound pressure difference Dn,e,w* with wind shield MWS-A	36 dB
Standard sound pressure difference Dn,e,w* with window kit WA and WSG-W	48 dB

** Rating according to EN ISO 10140-2-2010*

ENERGY DATA

Code	Unit of measurement	VORT HRW 20 MONO HCS 11631	VORT HRW 20 MONO 11634	VORT HRW 20 MONO RC 11635
Supplier's name or trade mark	-	Vortice	Vortice	Vortice
Specific Energy Consumption class SEC in average climate zone	-	A*	A*	A*
Specific Energy Consumption class SEC average	kWh/m² year	- 39.8	- 39.8	- 39.8
Specific Energy Consumption class SEC cold		- 83.3	- 83.3	- 83.3
Specific Energy Consumption class SEC warm		- 14.9	- 14.9	- 14.9
Declared typology	-	URVU*	URVU*	URVU*
Type of drive	-	VSD**	VSD**	VSD**
Type of heat recovery system HRS	-	regenerative	regenerative	regenerative
Thermal efficiency of heat recovery at reference air flow	%	90	90	90
Maximum flow rate [m3/s]	m^3/h	31	31	31
Electric power input of the fan drive, including any motor control equipment, at maximum flow rate	W	5.1	5.1	5.1
Sound power level LWA	LWA [dB(A)]	44	44	44
Reference flow rate	m^3/s	0.006	0.006	0.006
Reference pressure difference	Pa	10	10	10
SPI***	$W/(m^3/h)$	0.166	0.166	0.166
Control factor CTRL	-	1	1	1
Control typology	-	manual	manual	manual
Maximum internal leakage rates	%	NA*	NA*	NA*
Maximum external leakage rates	%	NA*	NA*	NA*
Mixing rate	-	NA*	NA*	NA*
Position and description of visual filter warning	-	NA*	NA*	NA*
Airflow sensitivity to pressure variations at + 20Pa and – 20 Pa	-	0.48	0.48	0.48
Indoor/outdoor air tightness	m^3/h	NA*	NA*	NA*
Annual electricity consumption (AEC)	kWh electricity/year	229	229	229
AHS average Annual heating saved	kWh primary energy/year	4550	4550	4550
AHS cold Annual heating saved		8901	8901	8901
AHS warm Annual heating saved		2057	2057	2057

**URVU: Unidirectional Residential Ventilation Unit*
***VSD: Variable Speed Drive*
****SPI: Specific Power Input*
NA: data not applicable

PERFORMANCE CURVES

VORT HRW 20 MONO cod. 11634 - 11635 - 11631

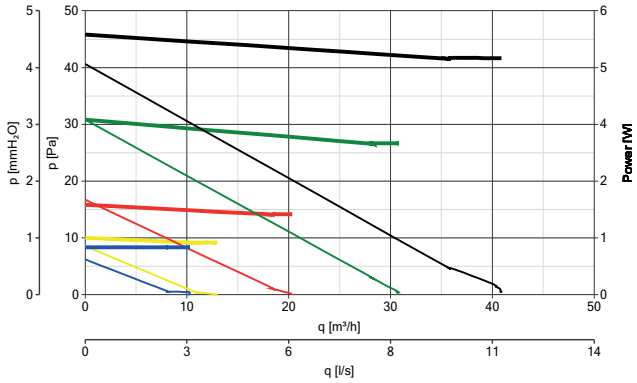

Power consumption
- Speed 5 (max)
- Speed 4
- Speed 3
- Speed 2
- Speed 1(min)

Performance curves
- Speed 5 (max)
- Speed 4
- Speed 3
- Speed 2
- Speed 1(min)

DIMENSIONS

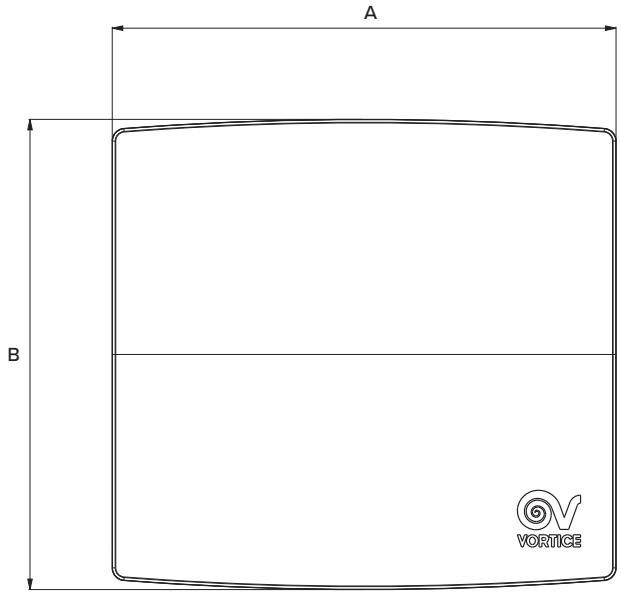

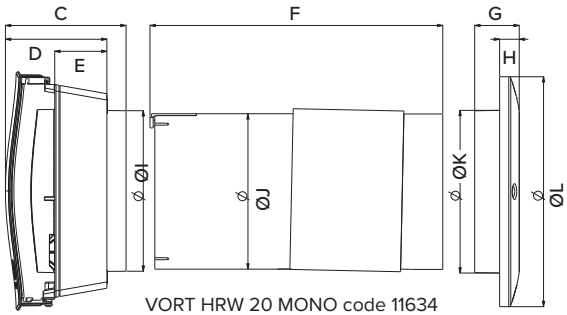

VORT HRW 20 MONO code 11634
VORT HRW 20 MONO HCS code 11631

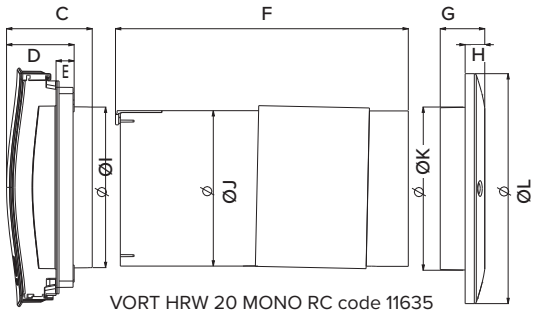

VORT HRW 20 MONO RC code 11635

MODELS	CODE	A	B	C	D	E	F	G	H	Ø I	Ø J	Ø K	Ø L
VORT HRW 20 MONO	11634			113	95	49							
VORT HRW 20 MONO RC	11635	240	224	80	64	17	275	42	18	151	146	153	216
VORT HRW 20 MONO HCS	11631			113	95	49							

Dimensions (mm)

VORT HRW 20 MONO D

NEW

Decentralized heat recovery units

Decentralized ventilation system with heat recovery, high efficiency, suitable for recessed installation (nominal hole diameters 160 mm) in outside walls of thickness between 285 mm and 700 mm. Quiet, efficient, energy saving and antiallergic (thanks to built-in filers preventing the release of pollutants and allergens into the surrounding air), easy to install and maintain, the VORT HRW 20 MONO D (code 11671), represents the ideal alternative to traditional dual flow centralized ventilation systems.

- Recessed wall-mount installation with housing made of expanded polypropylene (PPE).
- Internal panel made of self-extinguishing plastic polymer (ABS V0), coated with heat-insulating material to avoid condensation and designed without frontal vents so as to blend effortlessly into the interior decor (peripheral intake and outlet vents). Provision made for chased wiring.
- External grille made of plastic resin, complete with fly screen.
- Fan unit with EC motor, guaranteeing ultra low energy usage, powered at low voltage and with shaft mounted on ball bearings to ensure virtually "maintenance free" operation. 5 fan speeds, favouring selection of the best balance between volume of air handled, power consumption and noise level.
- High efficiency storage heat exchanger, made of ceramic honeycomb material designed to maximize the heat exchange surface.
- G3 filter, mounted in separate frame to facilitate user serviceability, washable and easily accessible for cleaning and maintenance.
- Mesh prefilter housed adjacent to the external grille.
- Wired remote control unit supplied as standard accessory (code 21145), wall-mounted and compatible with DIN standard circular back box, diameter 60 mm. Complete with circuit board designed for use in combination with three alternative power adapters (optional), in versions for recessed mounting or panel installation (DIN rail) and designed to serve a maximum of 4 or 6 products, the control unit includes 2 Leds (indicating the operational status of the product and warning when the filter is clogged) and is factory prepared for use in combination with IR remote control.
- Protection rating: IPX4.
- Insulation class: II ⧈.

VORT HRW 20 MONO D
(code 11671)

VORT HRW 20 MONO D

NEW

Decentralized heat recovery units

KEY FEATURES

- Ultra low power consumption, perfectly compatible with operation 24/7.
- High heat exchange efficiency (up to 89%), certified by independent body, guaranteeing comfort and minimal waste of energy.
- Extremely low noise levels, compatible with installation in livingrooms (lounge, study, bedroom), and use during the night.
- Offering compact dimensions, plus ease of installation and set-up, these VORT HRW 20 MONO D units are ideal both for new buildings and for renovation projects.
- Wide range of alternative operating modes allowing selection of the best balance between performance, power consumption and noise levels.
- Simple and intuitive to use.
- Ventilation duct with damper mechanism, to prevent the risk of contaminants entering from outside and maximize heat insulation in the event that the room will not be occupied for extended periods.
- Facility of operation in conjunction with an extractor fan, to ensure continuous and correct ventilation of the dwelling.
- Option of operation in automatic mode, enabled by installing temperature and relative humidity sensors (optional).
- Possibility of installation on outside walls of thickness between 285 mm and 700 mm (with optional accessory).
- Operation permissible across a wide range of outdoor temperatures (-20°/ 50° C).

TECHNICAL DATA

VORT HRW 20 MONO D code 11671					
Speed	**1**	**2**	**3**	**4**	**BOOST**
Supply/extract airflow at different speed leves m^3/h	9	14	25	33	42
Sound pressure breakout LPA dB(A)*	24,5	26,9	32,8	38,9	44,5
Fan power W	1.0	1,3	1,8	3,8	5,5
Heat recovery efficciency	up to 89%				
Supply voltage V	input 230 V - 50/60 Hz /output 12 V				
Nominal current A	0,015	0,017	0,023	0,038	0,05
Weight Kg	2,55				
Temperature Max C°	-20° / 50° C				

** Rating according to UNI EN ISO 3741: 2010*

SOUNDS LEVELS

Standard sound pressure difference Dn,e,w*	32 dB
Standard sound pressure difference Dn,e,w* with wind shield MWS	35 dB
Standard sound pressure difference Dn,e,w* with wind shield MWS-A	36 dB
Standard sound pressure difference Dn,e,w* with window kit WA and WSG-W	48 dB

** Rating according to EN ISO 10140-2-2010*

ENERGY DATA

	Code	Unit of measurement	VORT HRW 20 MONO D 11671
Supplier's name or trade mark		-	Vortice
Specific Energy Consumption class SEC in average climate zone		-	A*
Specific Energy Consumption class SEC average		kWh/m² year	- 40.1
Specific Energy Consumption class SEC cold			- 83.4
Specific Energy Consumption class SEC warm			-15,3
Declared typology		-	URVU*
Type of drive		-	VSD**
Type of heat recovery system HRS		-	regenerative
Thermal efficiency of heat recovery at reference air flow		%	89
Maximum flow rate [m^3/s]		m^3/h	35
Electric power input of the fan drive, including any motor control equipment, at maximum flow rate		W	5.5
Sound power level LWA		LWA [dB(A)]	46
Reference flow rate		m^3/s	25
Reference pressure difference		Pa	10
SPI***		W/(m^3/h)	0.148
Control factor CTRL		-	1
Control typology		-	manual
Maximum internal leakage rates		%	NA*
Maximum external leakage rates		%	NA*
Mixing rate		-	NA*
Position and description of visual filter warning		-	NA*
Airflow sensitivity to pressure variations at + 20Pa and – 20 Pa		-	0.48
Indoor/outdoor air tightness		m^3/h	NA*
Annual electricity consumption (AEC)		kWh electricity/year	204
AHS average Annual heating saved		kWh primary energy/year	4515
AHS cold Annual heating saved			8833
AHS warm Annual heating saved			2042

**URVU: Unidirectional Residential Ventilation Unit* ***VSD: Variable Speed Drive* ****SPI: Specific Power Input* *NA: data not applicable*

VORT HRW 20 MONO D

NEW

Decentralized heat recovery units

PERFORMANCE CURVES

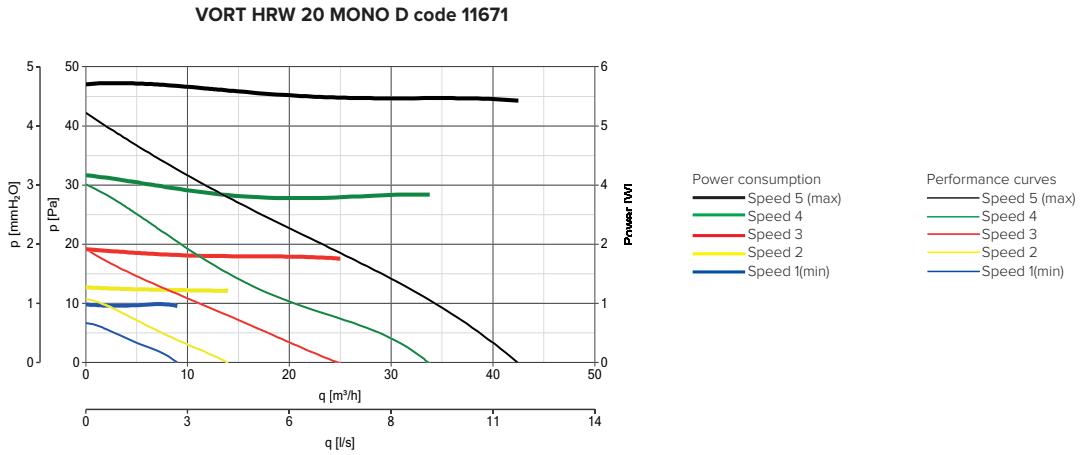

DIMENSIONS

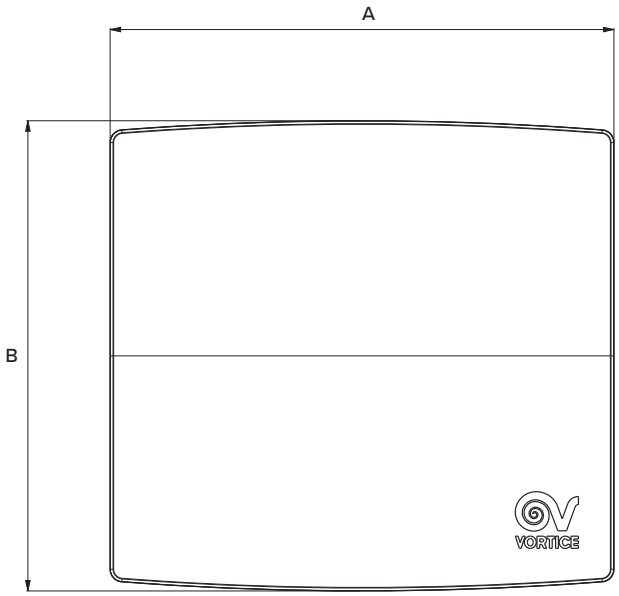

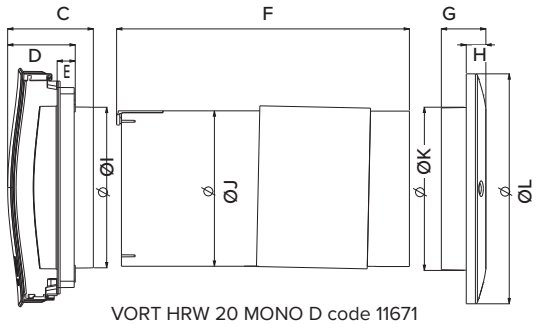

VORT HRW 20 MONO D code 11671

MODELS	CODE	A	B	C	D	E	F	G	H	Ø I	Ø J	Ø K	Ø L
VORT HRW 20 MONO D	11671	240	224	80	64	17	275	42	18	151	146	153	216

Dimensions (mm)

CONTROL PANEL VORT VORT HRW MONO D

HRW RCD D - code 21145
Remote control

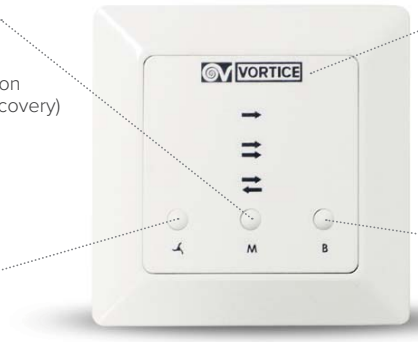

Mode Selection:
→ extraction

⇄ Normal ventilation (without heat recovery)

⇄ Heat recovery

Speed selection

Filter status indicator LED:
LED off → filter clean;
LED on → filters to be cleaned or replaced

Boost speed

ACCESSORIES ON REQUEST FOR ALL MODELS

C TEMP - code 12992
Temperature sensor
not for code 11631

C HCS - code 12994
Humidity sensor
not for code 11631

HRW PVC Tube - code 22599
PCV tube Ø 160 mm
Lenght from 400 to 700 mm

M5 filter - code 22699
Filter

Kit filter - code 22466
Filter

RGR - code 21190
Flexible grille
no external scaffoldin

MWS-A - code 21219
Wind shield in stainless
steel with sound insulation

MWS - code 21148
Wind shield
in stainless steel

WA - code 21191
Adapter circular/rectangular
for window grille mounting

WSG-W - code 21193
Recantular grille for
WA kit white finish

WSG-INOX - code 21192
Recantular grille for
WA kit stainless steel

ACCESSORIES ON REQUEST FOR VORT HRW MONO RC code 11635

HRW RC - code 12993
Remote unit control

Built-in box - code 22732
Built-in box for code 12993

Box 503 - code 22461
Flush mounting box 503

ACCESSORIES ON REQUEST FOR VORT HRW MONO D code 11671

PS24W - code 21187
Power supply for wall
mounting - up to 4 units

PS36W - code 21188
Power supply for wall
mounting - up to 6 units

PS36WDIN - code 21189
Power supply for electrical
panel (DIN bar) - up to 6 units

C SMOKE - code 12993
Smoke sensor

Predstavništvo za Srbiju
AIRTREND Ltd.
Kumanovska 14
11000 Beograd, Srbija
Telefon +381 (0)11 383 6886, 308 5740
Telefax +381 (0)11 344 4113
E-mail gobrid@eunet.rs
www.airtrend.rs

Distribucija i prodaja
KOVENT
Kumanovska 14
Tel: 011 383 6886, 308 5740
Fax: 011 344 4113
E-mail office@kovent.rs
www.kovent.rs

VORTICE